CAD-CAP Portfolio

Adrián Ceballos

F1 Nose

Task:

- Design an F1 nose
- Think about how you structure your design
- Choose the number of sections
- Think about how to design the round tip (fill/multi-section)
- Use tangencies for smooth surfaces

My design:

- Comprehensive construction with an organized feature tree
- Ensured tangency in cone and tip with strategic use of support surfaces
- Added wing element for camera mounting

F1 Nose

Design approach:

- Multiple sections included in wireframe to closely control shape over the whole length
- Same guides followed in nose tip construction

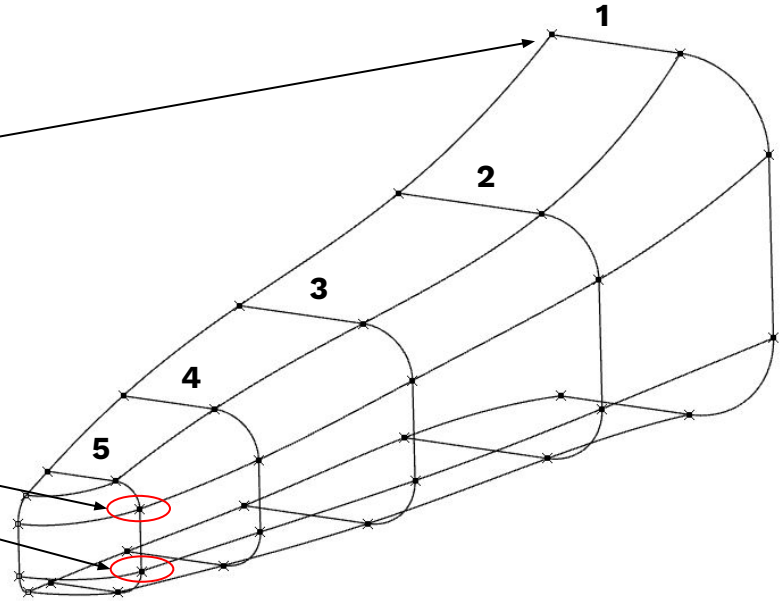

F1 Nose

<u>Design approach:</u>

- Symmetry consideration
- Corner surfaces supported by upper, lower and side sections
- Added camera mountings

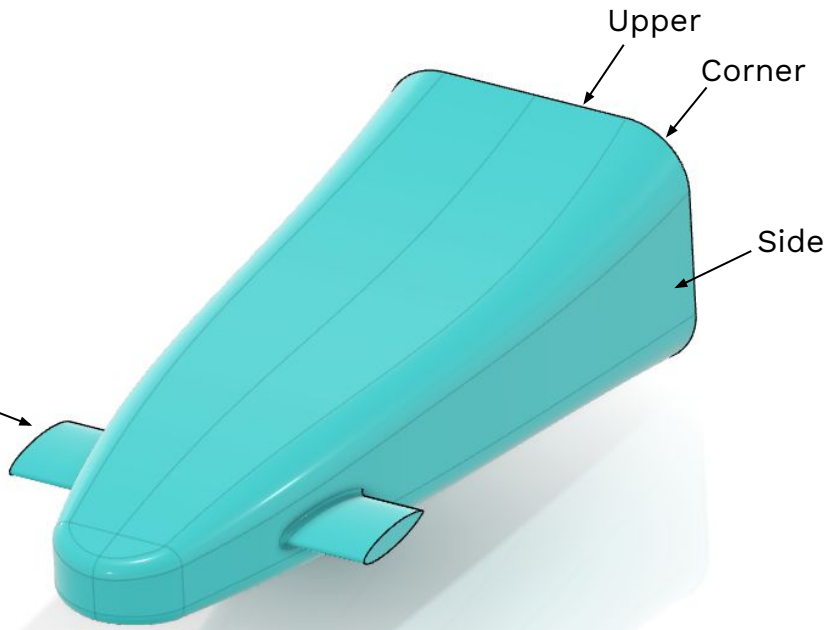

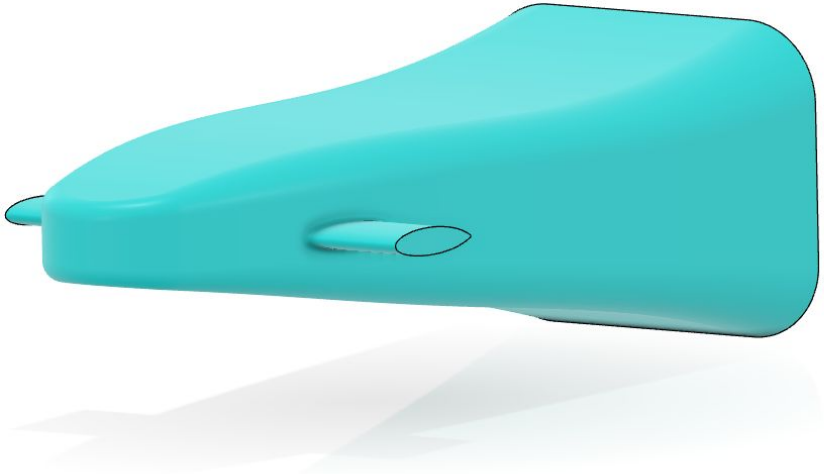

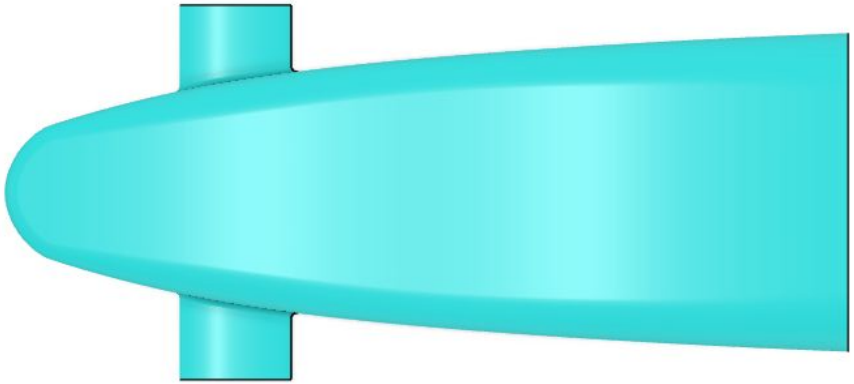

F1 Nose

Results and conclusions:

- Having a simple and organized workflow makes the biggest difference when adding design features and/or changing parameters
- A good strategy to follow-up with this would be to have a solid base in the repetition of relative simple sections
- Always considerate a plan to generate the required surfaces

T-Wing

Task:

- Design your own T-Wing shape
- Turn your T-Wing surface into a producible part
- Choose the number of sections
- Design your own modularity with the shark fin
- Create a technical drawing for your T-Wing

My design:

- Simple approach with the possibility to further add elements if needed
- Accessible modularity with mounting points in just only one side of the car

- Simple design features adaptable to changes

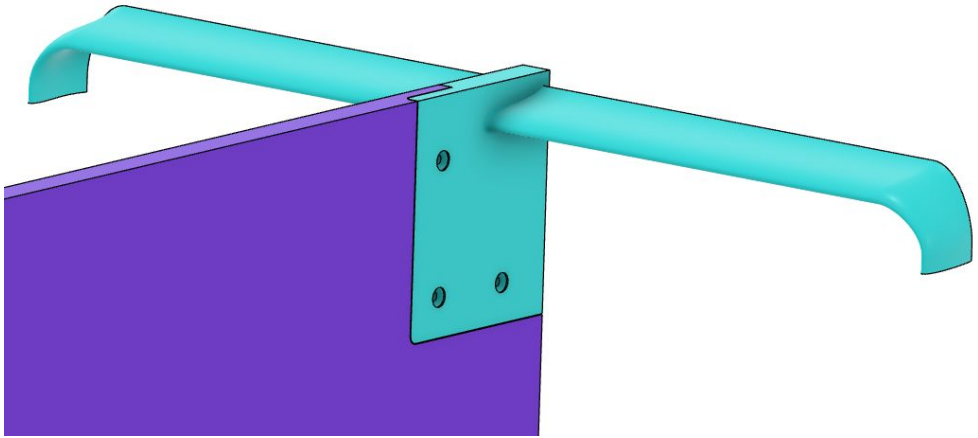

- <u>Upper profile</u> → extruded surface (**A**)
- <u>Lower profile</u> → generate guides for tip element (multi section surface **B**) & extrude if more elements are needed (**C**)

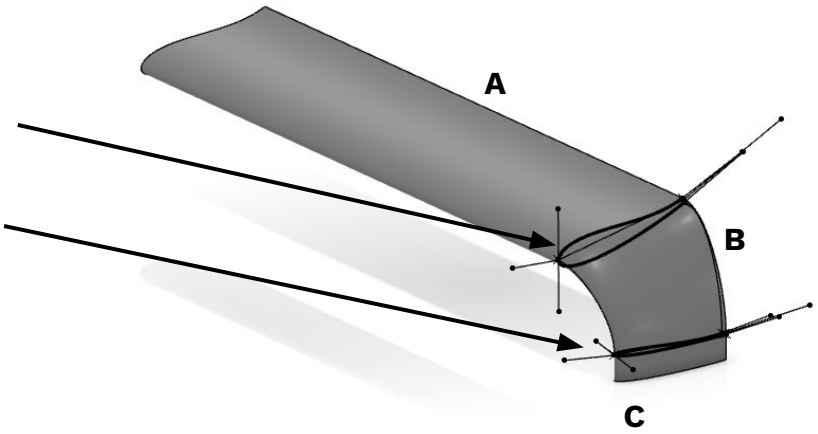

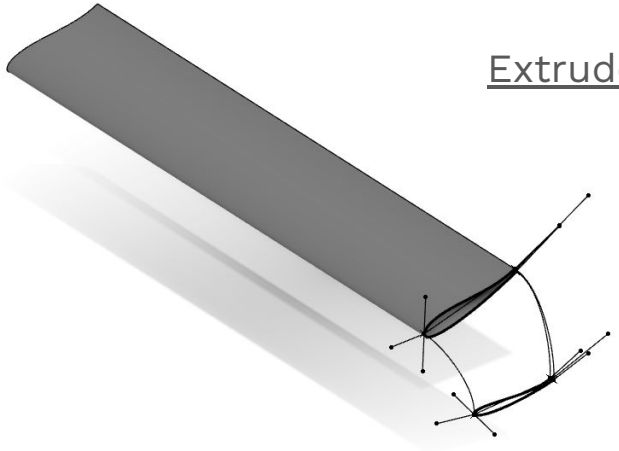

Extruded surface

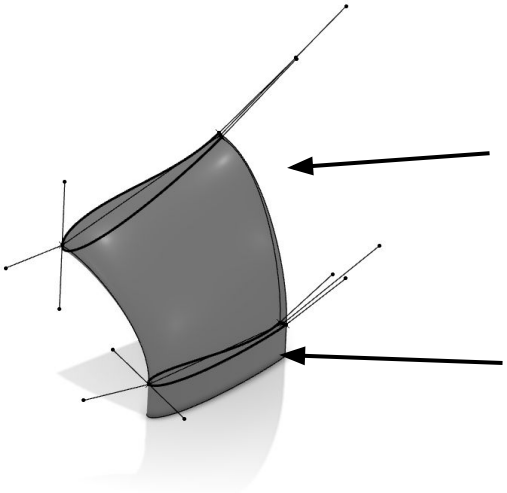

Multi section surface

Extruded surface

Regulation box gap

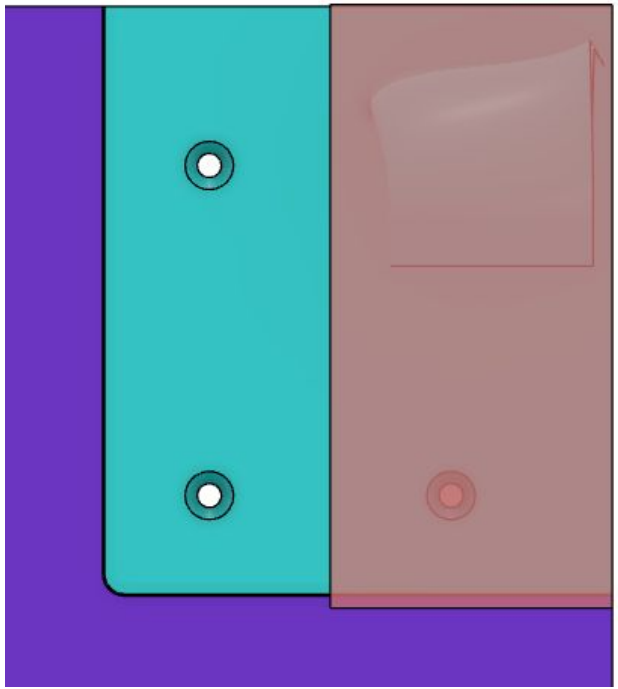

REV	DATE	DESCRIPTION	INIT
A	20/03/2024	None	Adrián Ceballos

NOTES:

1. WING ELEMENT IS SYMMETRIC TO CL
2. WING ELEMENT RADIUSES CONSIDERED

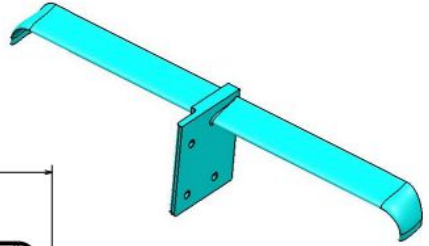

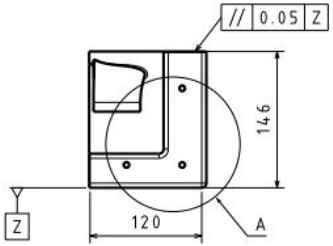

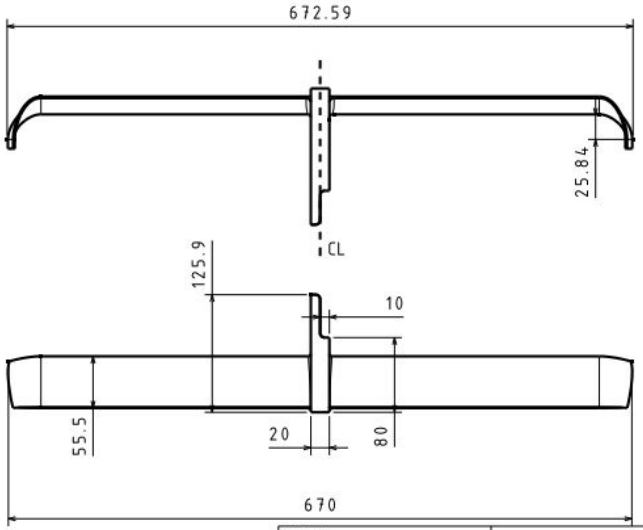

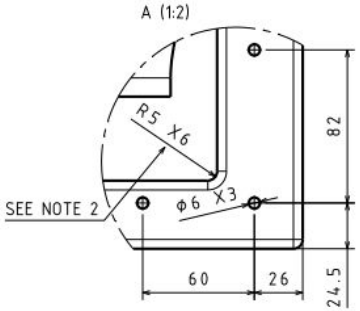

DESIGNED BY: Adrián Ceballos DATE: 20/03/2024		EX1W4_ACC	
CHECKED BY: XXX DATE: XXX			
SIZE: A3		DASSAULT SYSTEMES	
SCALE: 1:3	WEIGHT (KG): XXX	DRAWING NUMBER: XXX	SHEET: 1 / 1

This drawing is our property; It can't be reproduced or communicated without our written agreement.

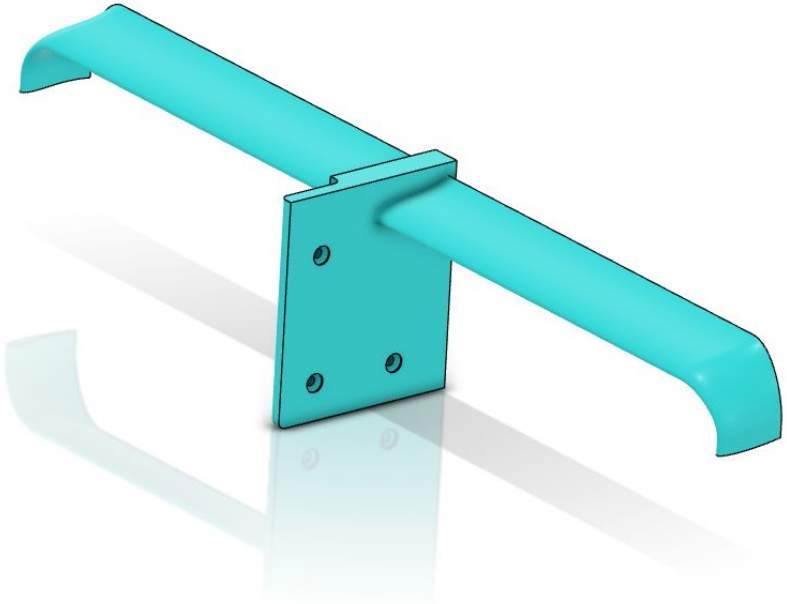

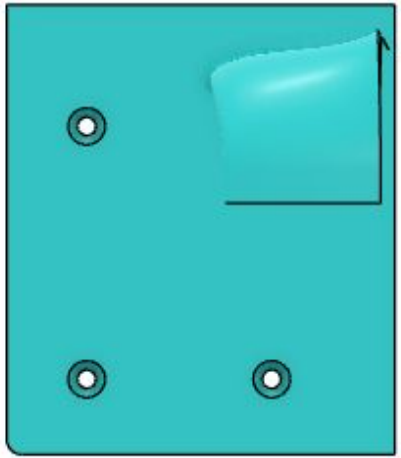

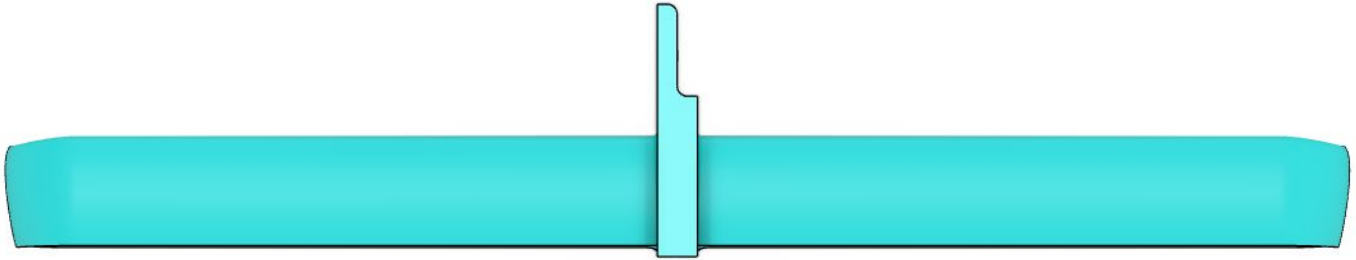

T-Wing

Results and conclusions:

- Directly having to face specific design results definitely made me realize how much impact is weighted during the first workflow directions
- We, as designers, have to bring the best possible translation between the original idea and how factible it is to apply it

Rear Wing Design

Task:

- Design a rear wing (main plane)
- Total width: 1000 mm
- Chord length: around 350 mm
- Use at least 2 sections
- Design the left hand side
- Build a solid wireframe
- Mirror the part for your output set

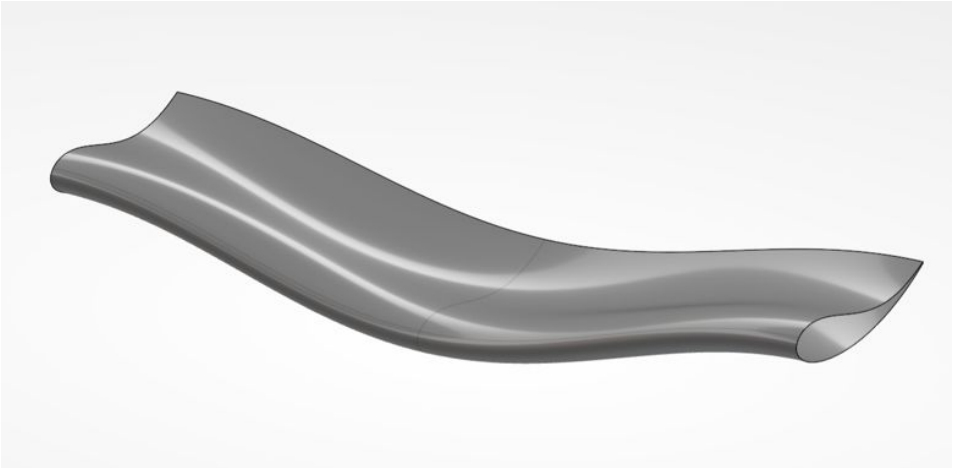

Rear Wing Design

<u>Design approach:</u>

- Wireframe constructed by two sections
- Addition of flap element
- Symmetry considered
- Guide **1** : Connected by leading edge point of each section
- Guide **2**: Connected by trailing edge point (pressure side) of each section
- Guide **3**: Connected by trailing edge point (suction side) of each section

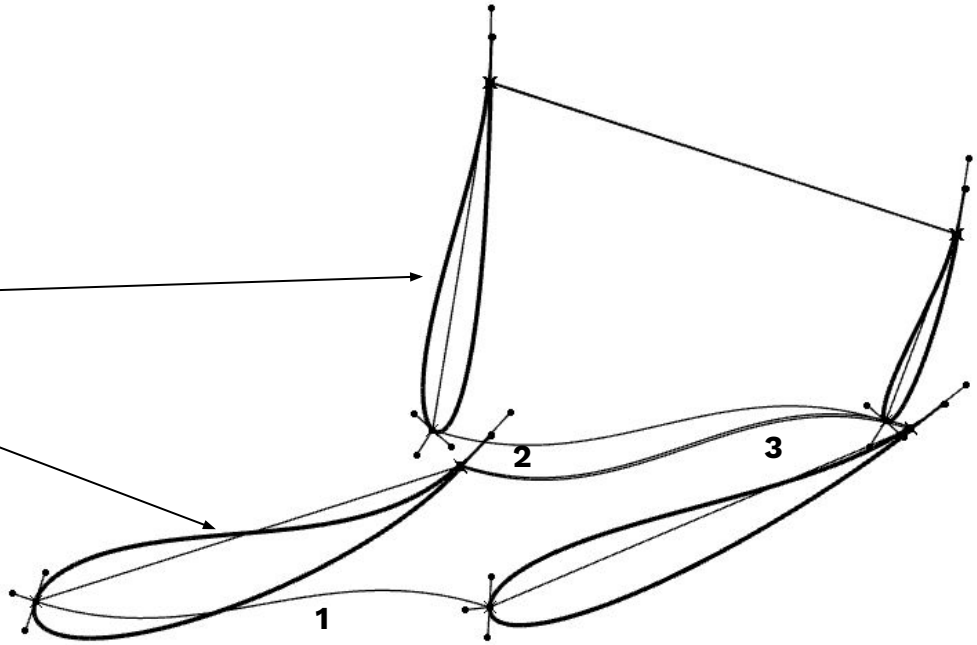

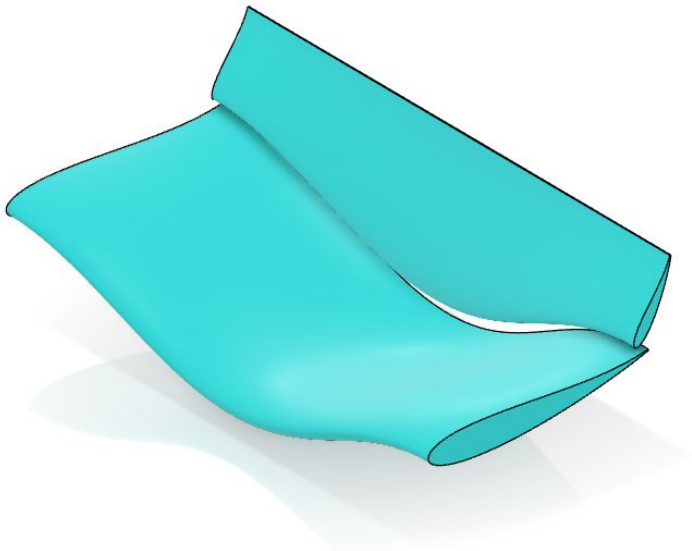

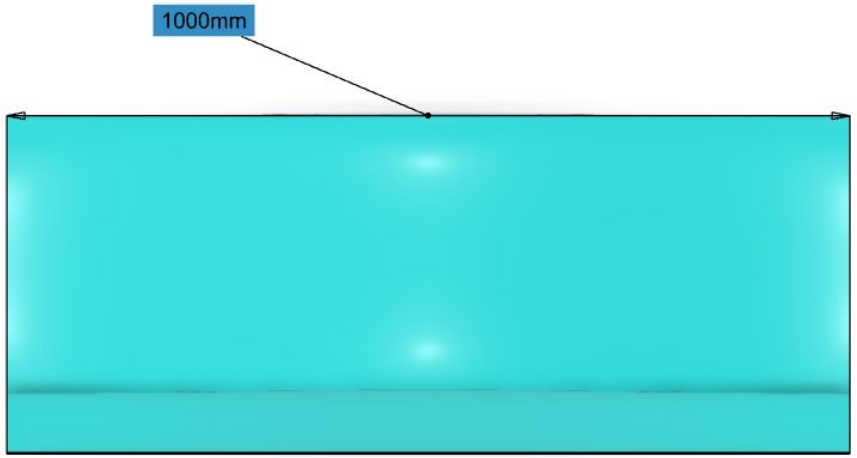
1000mm

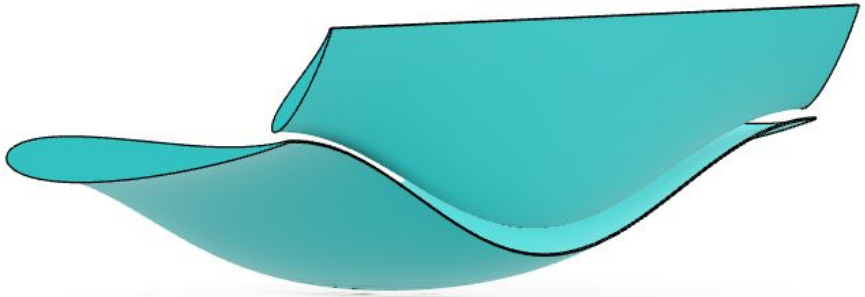

Rear Wing Design

Results and conclusions:

- Coming to understand the logic behind the construction of a rear wing part opens up a world of possibilities to bring new ideas into life
- Starting up with a relatively simple wireframe, you can constantly progress to a more robust design idea

Course learnings

- Really useful strategies to boost your overall design process
- Deep understanding of the workflow needed to implement new F1 parts
- With all the tools given your creativity is the limit
- Interacting is learning. Feel free to take inspiration from what other students present or apply

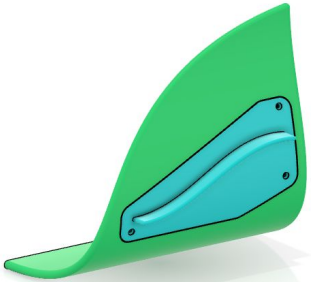

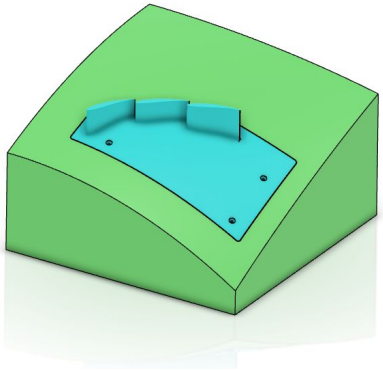

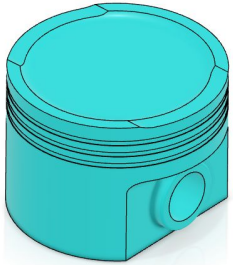

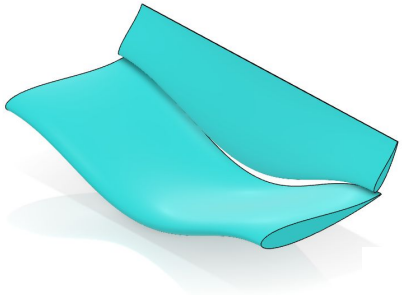

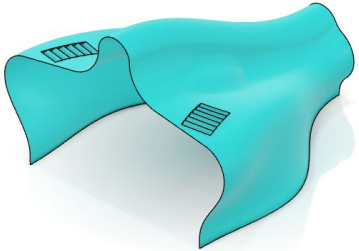

MOTORSPORT ENGINEER